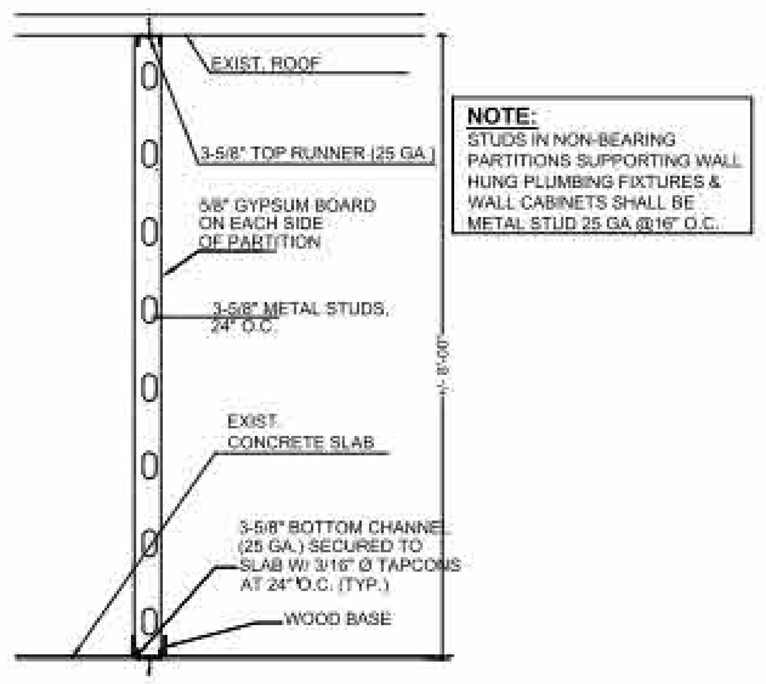

01 A METAL STUD INTERIOR PARTITION. TYPE A
NTS

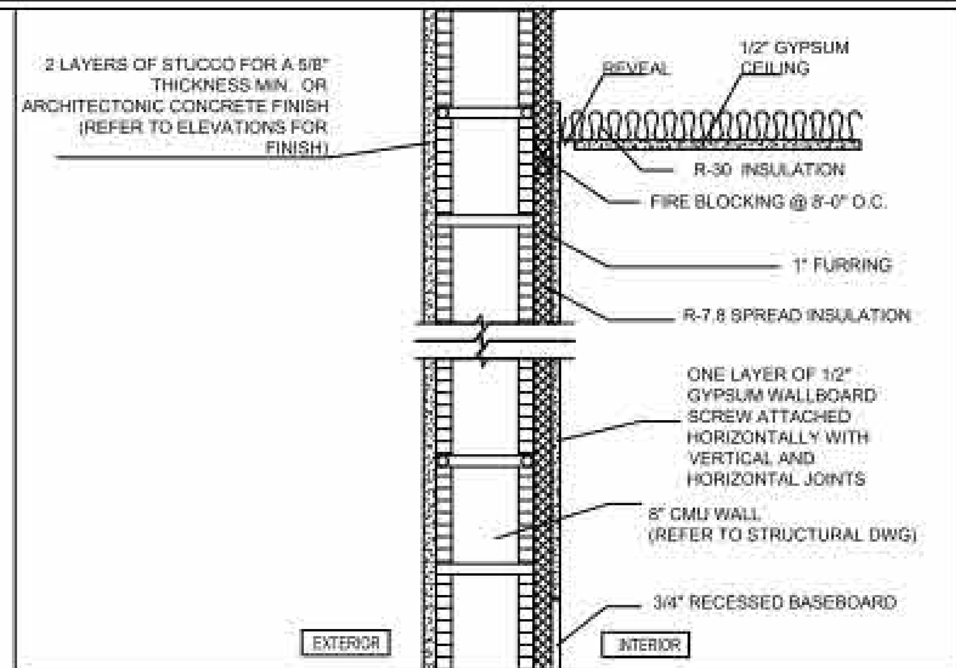

BACKING FOR WALL-HUNG FIXTURES NOTES
WHERE WALL-HUNG FIXTURES ARE PROVIDED, 2"X4" BRACING BETWEEN STUDS. AT POINT OF ATTACHMENT OF FIXTURE WALL BE PROVIDED TO WITHSTAND 200 LBS FORCE APPLIED IN ALL DIRECTIONS (OR SUPPORTS BE PROVIDED AS PER FIXTURE MANUFACTURER'S REQUIREMENT)

02 B EXTERIOR WALL.
NTS NTS

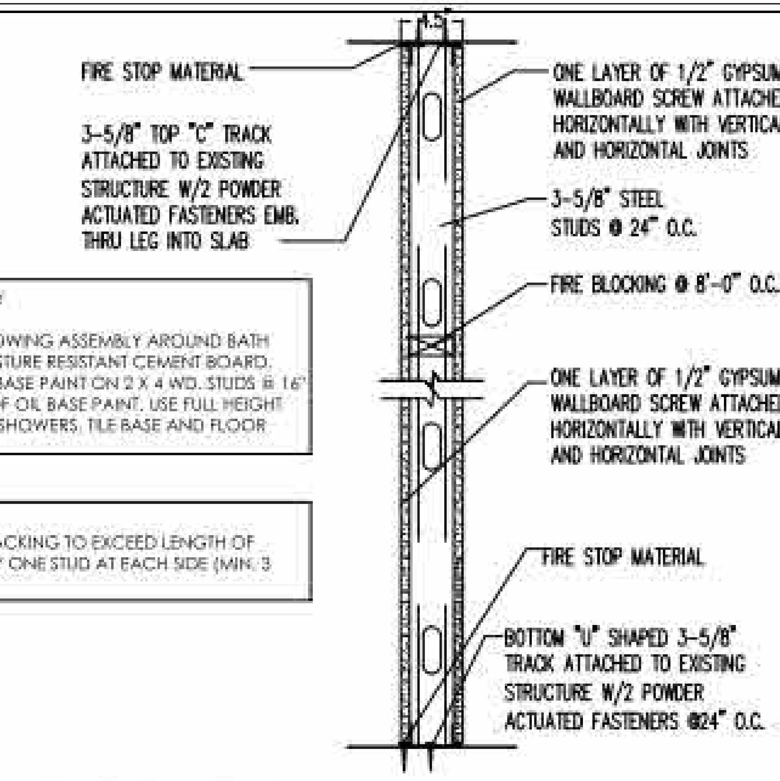

(*)BATHS ONLY
NOTE:
USE THE FOLLOWING ASSEMBLY AROUND BATH TUB. 1/2' MOISTURE RESISTANT CEMENT BOARD. FINISH W/OIL BASE PAINT ON 2 X 4 WD. STUDS @ 16" O.C. IN LIEU OF OIL BASE PAINT, USE FULL HEIGHT TILE FINISH AT SHOWERS, TILE BASE AND FLOOR

NOTE:
LENGTH OF BACKING TO EXCEED LENGTH OF EQUIPMENT BY ONE STUD AT EACH SIDE (MIN. 3 STUDS)

03 C INTERIOR PARTITION
NTS

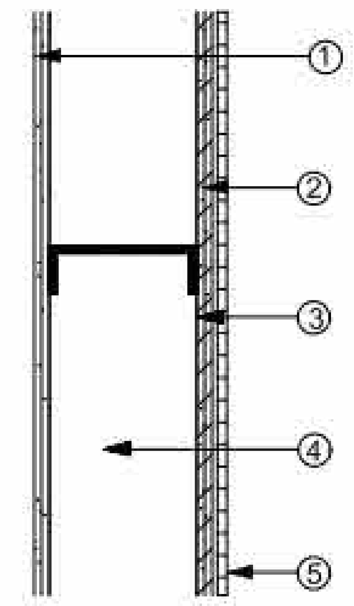

LEGEND
1. 1/2" GYPSUM BOARD
2. 1/2" MOISTURE RESISTANT (GREEN BD) GYP BOARD OR " DUROCK" BOARD.
3. 1-5/8" X 3-5/8" (25 GA.) METAL STUDS @ 24" C/C
4. R-11 BATT INSULATION (PAPER BACKED)
5. CERAMIC TILE.

04 EXIST./NEW BATHROOM PARTITION
NTS

System Performance
2 HR Fire
UL Design No. U411 (MEA 81-98-M)
48 STC Sound

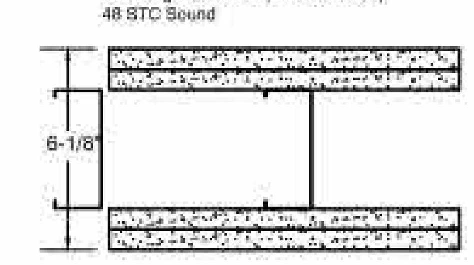

System Description
Steel Stud Partition (Non-loadbearing)
- 5/8" SHEETROCK Brand FIRECODE C Core Gypsum Panels
- 3-5/8" 25 gauge steel stud 24" o.c.
- 5/8" SHEETROCK Brand FIRECODE C Core Gypsum Panels
- Face layer joints finished

05 TYP 2 HR- FIRE RATED - UL U411
NTS

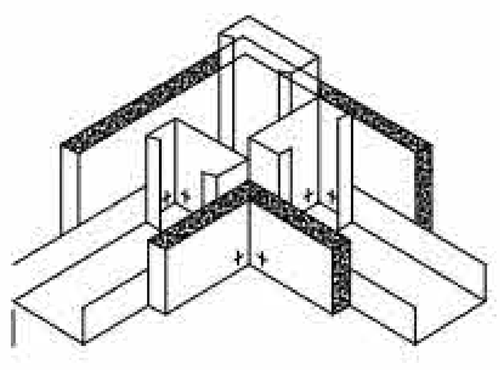

WALL CORNER DETAIL
STEEL STUDS PER WALL TYPE, SCREWS AS REQUIRED PER CODE, TYP.

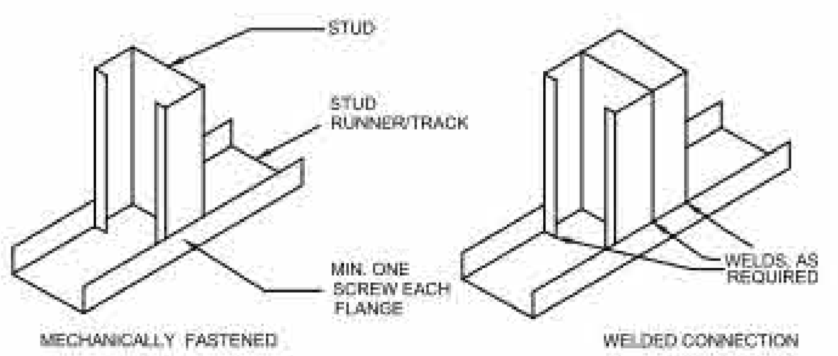

TRACK CONNECTION DETAIL
MECHANICALLY FASTENED

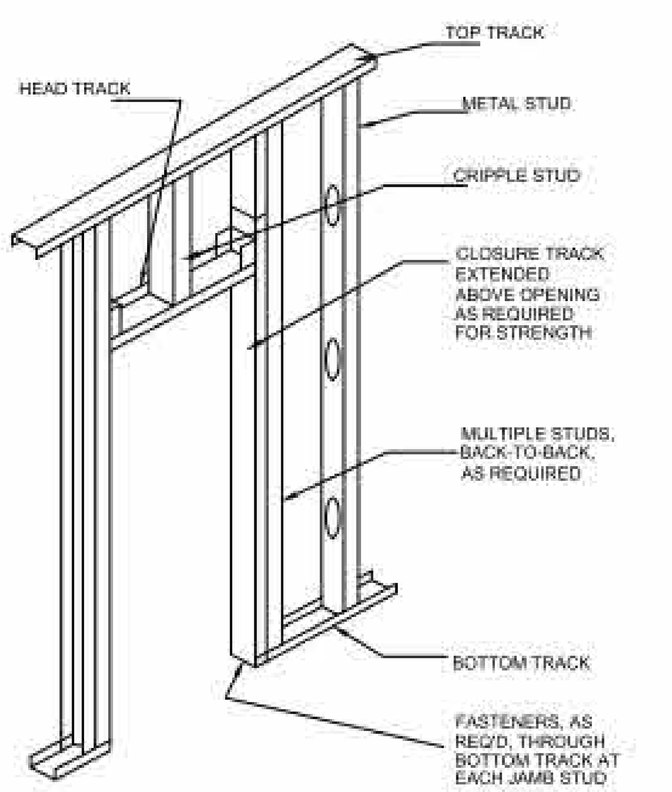

DETAIL A/S-1
STEEL STUDS PER WALL TYPE, SCREWS AS REQUIRED PER CODE, TYP.

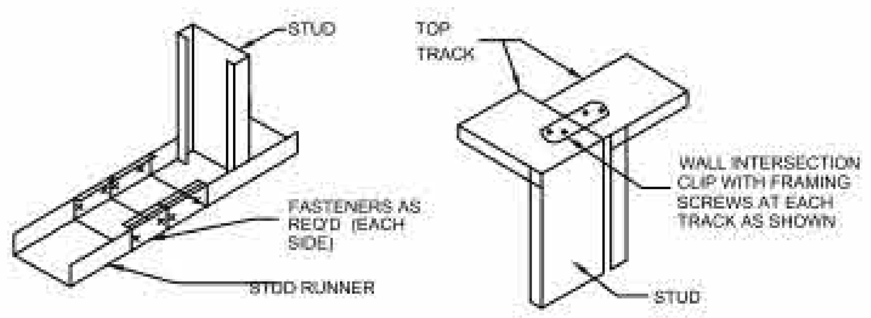

TOP-BOTTOM PLATE SPLICE DETAIL
MECHANICALLY FASTENED

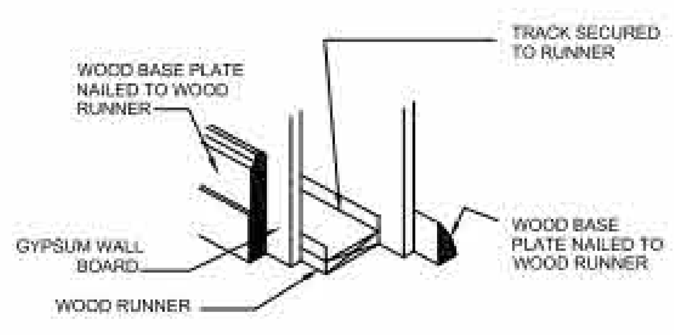

NAIBLE BASE DETAIL
OPTIONAL DETAIL RELATED TO OWNER FINISH SPECIFICATIONS

08 STUD CONNECTION DETAIL DETAIL
NTS

OUTSIDE INSIDE

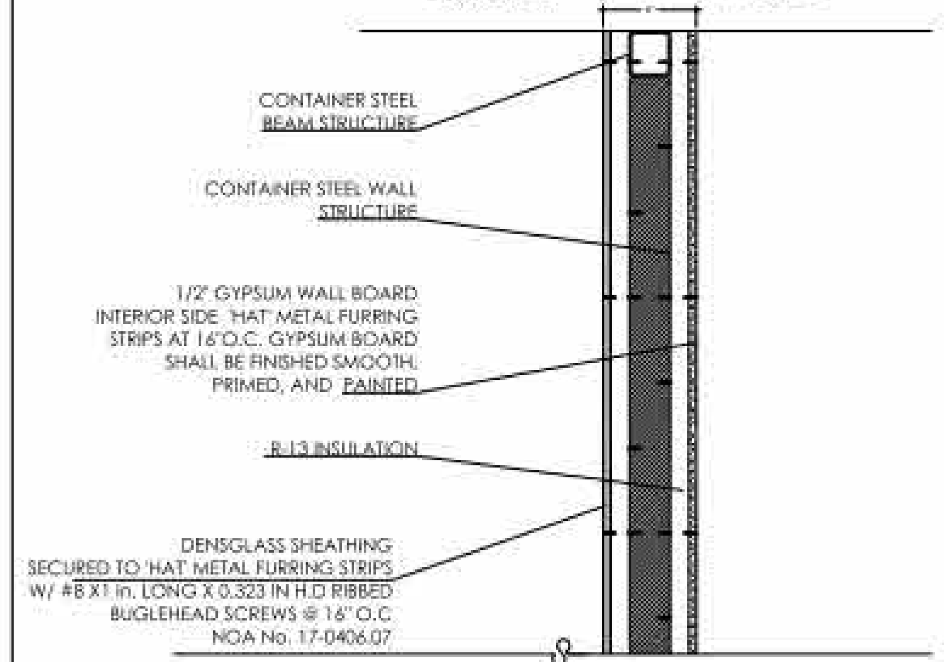

06 D TYP CONTAINER STEEL WALL STRUCTURE
NTS

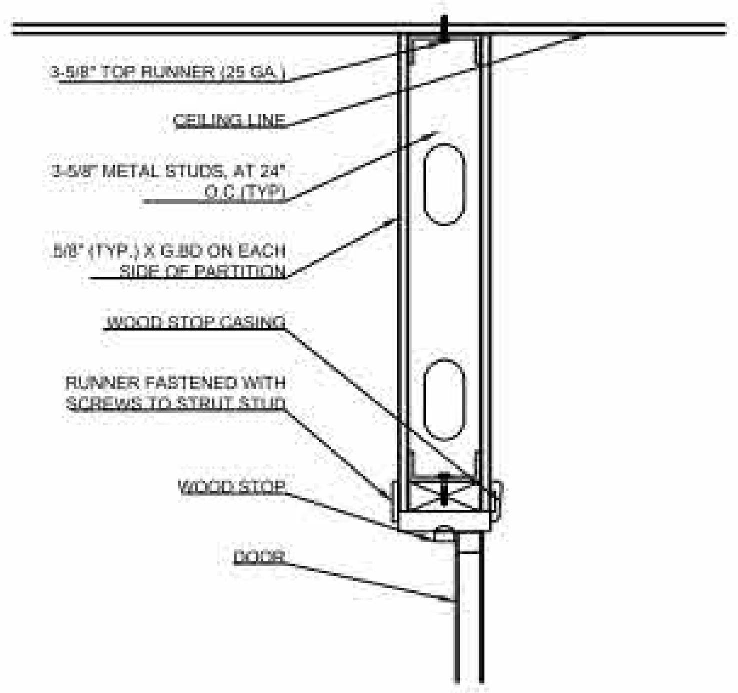

07 WOOD DOOR HEAD DETAIL
NTS

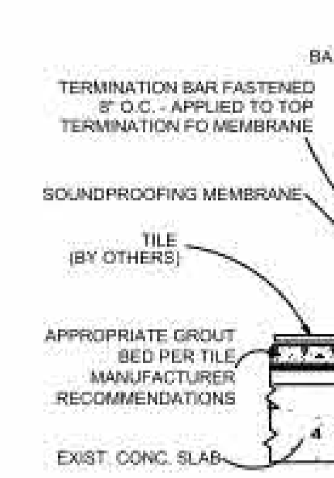

08 FLOOR DETAIL
NTS

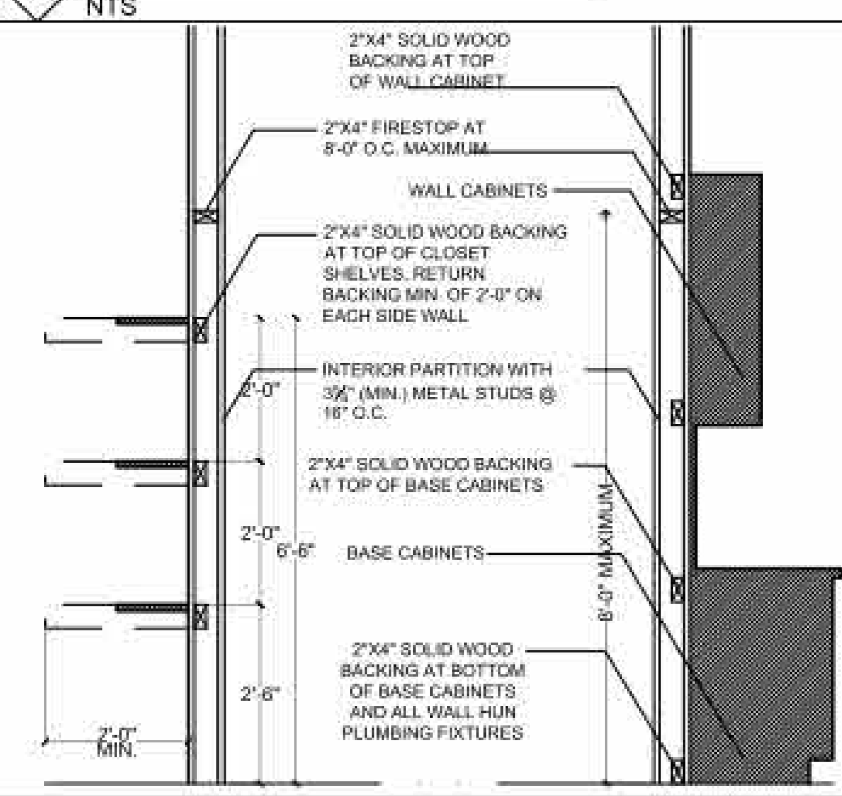

09 SHELF KITCHEN DETAIL
NTS

GENERAL NOTES :

1. PROVIDE WOOD BACKING FOR WALL CABINETS :
PROVIDE A MINIMUM 2"X4" HORIZONTAL WOOD MEMBER SECURELY FASTENED TO NOT LESS THAN (2) SUCH STUDS, SHALL BE INSTALLED FOR THE ATTACHMENT OF ALL WALL HUNG WALL CABINETS.
2. PROVIDE WOOD BACKING FOR PLUMBING FIXTURES :
PROVIDE A MINIMUM 2"X4" HORIZONTAL WOOD MEMBER SECURELY FASTENED TO NOT LESS THAN (2) SUCH STUDS, SHALL BE INSTALLED FOR THE ATTACHMENT OF EACH WALL HUNG PLUMBING FIXTURES. PROVIDE DOUBLE 20 MSG GALV. STEEL STUDS IN WALLS TO SUPPORT ALL WALL HUNG PLUMBING FIXTURES, AS PER (F.B.C. 2007 SECTION 2517.5.1.1), TYPICAL.
3. PROVIDE WOOD BACKING FOR ALL CLOSETS :
PROVIDE A MINIMUM 2"X4" HORIZONTAL WOOD MEMBER SECURELY FASTENED TO NOT LESS THAN (2) SUCH STUDS, SHALL BE INSTALLED FOR THE ATTACHMENT OF EACH WALL HUNG PLUMBING FIXTURE AND WALL CABINETS.

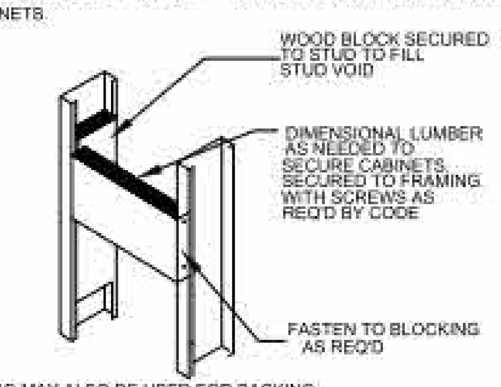

METAL, TRACK OR STRAPPING MAY ALSO BE USED FOR BACKING

10 CABINET BACKING DETAIL
NTS

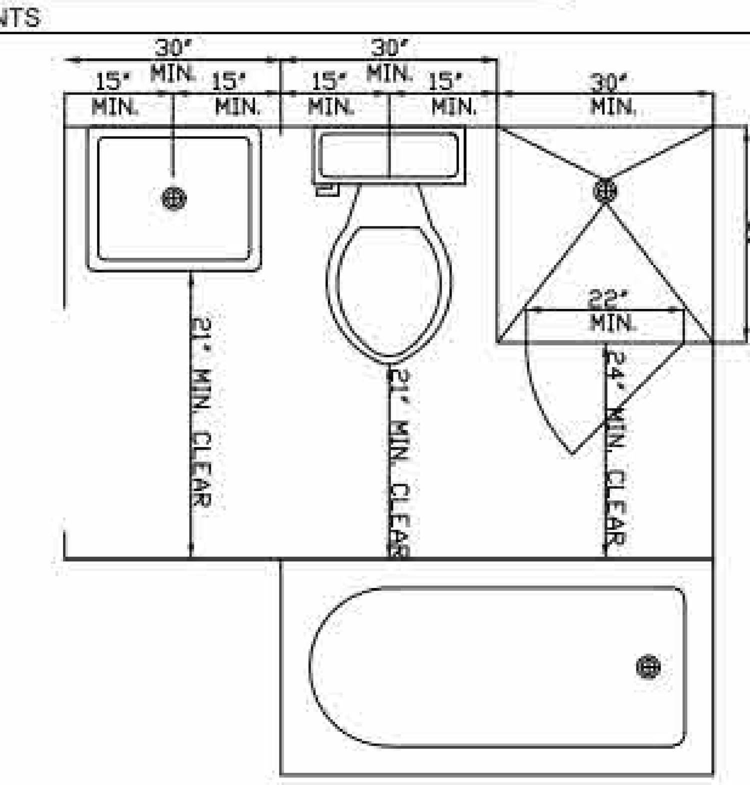

11 FIXTURE CLEARANCES
NTS

SECTION 302.9
WALL AND CEILING FINISHES

R302.9 FLAME SPREAD INDEX AND SMOKE-DEVELOPED INDEX FOR WALL AND CEILING FINISHES. FLAME SPREAD AND SMOKE INDEX FOR WALL AND CEILING FINISHES SHALL BE IN ACCORDANCE WITH SEC-TIONS R302.9.1 THROUGH R302.9.4.R302.9.1 FLAME SPREAD INDEX. WALL AND CEILING FINISHES SHALL HAVE A FLAME SPREAD INDEX OF NOT GREATER THAN 200.EXCEPTION: FLAME SPREAD INDEX REQUIREMENTS FOR FIN-ISHES SHALL NOT APPLY TO TRIM DEFINED AS PICTURE MOLDS,CHAIR RAILS, BASEBOARDS AND HANDRAILS; TO DOORS AND WIN-DOWS OR THEIR FRAMES; OR TO MATERIALS THAT ARE LESS THAN 1/28INCH (0.91 MM) IN THICKNESS CEMENTED TO THE SURFACE OF WALLS OR CEILINGS IF THESE MATERIALS EXHIBIT FLAME SPREAD INDEX VALUES NO GREATER THAN THOSE OF PAPER OF THIS THICK-NESS CEMENTED TO A NONCOMBUSTIBLE BACKING.R302.9.2 SMOKE-DEVELOPED INDEX. WALL AND CEILING FIN-ISHES SHALL HAVE A SMOKE-DEVELOPED INDEX OF NOT GREATER THAN 450.R302.9.3 TESTING. TESTS SHALL BE MADE IN ACCORDANCE WITH ASTM E 84 OR UL 723.

SECTION302.10
FLAME SPREAD FOR INSULATION

R302.10 FLAME SPREAD INDEX AND SMOKE-DEVELOPED INDEX FOR INSULATION. FLAME SPREAD AND SMOKE-DEVELOPED INDEX FOR INSULATION SHALL BE IN ACCORDANCE WITH SECTIONS R302.10.1THROUGH R302.10.5.

R302.10.1 INSULATION. INSULATION MATERIALS, INCLUDING FAC-INGS, SUCH AS VAPOR RETARDERS AND VAPOR-PERMEABLE MEM-BRANES INSTALLED WITHIN FLOOR/CEILING ASSEMBLIES, ROOF/CEILING ASSEMBLIES, WALL ASSEMBLIES, CRAWL SPACES AND ATTICS SHALL HAVE A FLAME SPREAD INDEX NOT TO EXCEED 25WITH AN ACCOMPANYING SMOKE-DEVELOPED INDEX NOT TO EXCEED 450 WHEN TESTED IN ACCORDANCE WITH ASTM E 84 ORUL 723.

EXCEPTIONS:
1.WHEN SUCH MATERIALS ARE INSTALLED IN CONCEALED SPACES, THE FLAME SPREAD INDEX AND SMOKE-DEVEL-OPED INDEX LIMITATIONS DO NOT APPLY TO THE FAC-INGS, PROVIDED THAT THE FACING IS INSTALLED INSUBSTANTIAL CONTACT WITH THE UNEXPOSED SURFACE OF THE CEILING, FLOOR OR WALL FINISH.
2.CELLULOSE LOOSE-FILL INSULATION, WHICH IS NOT SPRAY APPLIED, COMPLYING WITH THE REQUIREMENTS OF SEC-TION R302.10.3, SHALL ONLY BE REQUIRED TO MEET THE SMOKE-DEVELOPED INDEX OF NOT MORE THAN 450.
3.FOAM PLASTIC INSULATION SHALL COMPLY WITH SEC-TION R316.

12 FINISH NOTES
NTS

ARCHITECTURAL NOTES

THE CONTRACTOR SHALL INSPECT ALL EXISTING CONDITIONS, VERIFY ALL ON SITE DIMENSIONS, EQUIPMENT AND BUILDING SERVICE REQUIREMENTS PRIOR TO COMMENCEMENT OF WORK. ORIGINAL BUILDING PLANS SHOULD BE REVIEWED TO ASSESS THE ENTIRE SCOPE OF THE PROJECT.

THE CONTRACTOR SHALL BE RESPONSIBLE FOR COORDINATION WITH ALL OTHER TRADES INCLUDING THE EXISTING STRUCTURAL ELEMENTS OF THE BUILDING.

THE CONTRACTOR SHALL PROVIDE ALL ELEMENTS OF THE SYSTEMS AS INTENDED BY THE DESIGN TO RESULT IN COMPLETE AND WORKABLE SYSTEMS IN ACCORDANCE WITH ALL STATE AND LOCAL CODES, SAFETY STANDARDS AND GOVERNING ORDINANCES.

ALL FINISH MATERIALS CHOSEN FOR THIS SPACE WILL BE DETERMINED BY OWNER.

ALL CONSTRUCTION SHALL CONFORM TO ALL CODE REGULATIONS AND RESTRICTIONS.

THE CONTRACTOR SHALL BE RESPONSIBLE FOR REMOVAL OF ALL DEBRIS.

DRAWINGS ARE DIAGRAMMATIC. DO NOT SCALE FOR EXACT LOCATION OF OPENINGS, ALL WORK SHALL BE COORDINATED WITH OTHER TRADES TO AVOID INTERFERENCE WITH PROGRESS OF THE CONSTRUCTION.

REQUIRED INSURANCE SHALL BE PROVIDED BY CONTRACTOR FOR PROTECTION AGAINST PUBLIC LIABILITY AND PROPERTY DAMAGE FOR THE DURATION OF THE WORK.

CONTRACTOR SHALL SECURE AND PAY FOR ALL PERMITS, FEES, INSPECTIONS AND TESTS.

CONTRACTOR SHALL VERIFY ALL DIMENSIONS ON JOB PRIOR TO BEGINNING.

CONSTRUCTION. DIMENSIONS SHALL TAKE PRECEDENCE OVER DRAWINGS

13 ARCHITECTURAL NOTES

SAFETY / EGRESS DOOR NOTES
NO DOOR IN THE PATH OF TRAVEL OF MEANS OF ESCAPE SHALL BE LESS THAN 32" WIDE, EXCEPT THAT BATHROOM DOORS MAY BE 24" WIDE, UNLESS A LARGER DOOR OPENING IS REQUIRED TO SATISFY THE REQUIREMENTS OF NFPA 101.
EVERY CLOSET DOOR LATCH SHALL BE SUCH THAT CHILDREN CAN OPEN THE DOOR FROM INSIDE THE CLOSET.
EVERY BATHROOM DOOR LOCK SHALL BE DESIGNED TO PERMIT THE OPENING OF THE LOCKED DOOR FROM THE OUTSIDE IN A EMERGENCY.
DOORS MAY BE SWINGING OR SLIDING, AND ARE EXEMPT FROM THE REQUIREMENTS OF SECTION 21-2.4.3 AND 21-2.4.4 OF THE 1994 ED. OF NFPA. 101
NO DOOR IN ANY MEANS OF ESCAPE SHALL BE LOCKED AGAINST EGRESS WHEN THE BUILDING IS OCCUPIED. ALL LOCKING DEVICES WHICH IMPEDE OR PROHIBIT EGRESS OR WHICH CAN NOT BE EASILY ENGAGED SHALL BE PROHIBITED

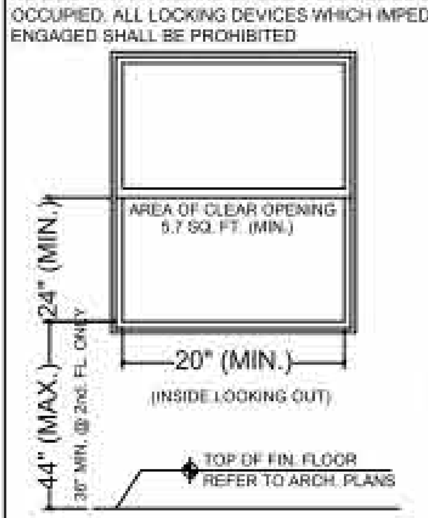

EGRESS WINDOW NOTES:
AN OUTSIDE WINDOW OR DOOR OPERABLE FROM THE INSIDE WITHOUT THE USE OF TOOLS AND PROVIDING A CLEAR OPENING OF NOT LESS THAN 20 IN. (50.8 CM) IN WIDTH, 24 IN. (61 CM) IN HEIGHT, AND 5.7 SQ. FT. (0.53) IN AREA. THE BOTTOM OF THE OPENING SHALL BE NO MORE THAN 44 IN. (112 CM) ABOVE THE FLOOR.. AS PER N.F.P.A. 101 SECT. 22-2.2.3 (C) AND SECT. 24.2

SAFEGUARDS: OPERABLE WINDOWS SHALL BE PROTECTED A FOLLOWS: WHERE THERE IS DROP OF MORE THAN 4'-0" ON THE FAR SIDE OF SUCH WINDOWS AND THE SILL IS LESS THAN 36" ABOVE THE NEAR SIDE WALKING SURFACE, SAFEGUARDS SHALL BE PROVIDED TO PREVENT THE FALL OF PERSONS WHEN SUCH WINDOWS ARE OPEN AS PER SECT. 3508.3 (E) (1) (APPLICABLE IN 2 nd. FLOOR WINDOWS ONLY)

14 EGRESS WINDOW DETAIL
NTS

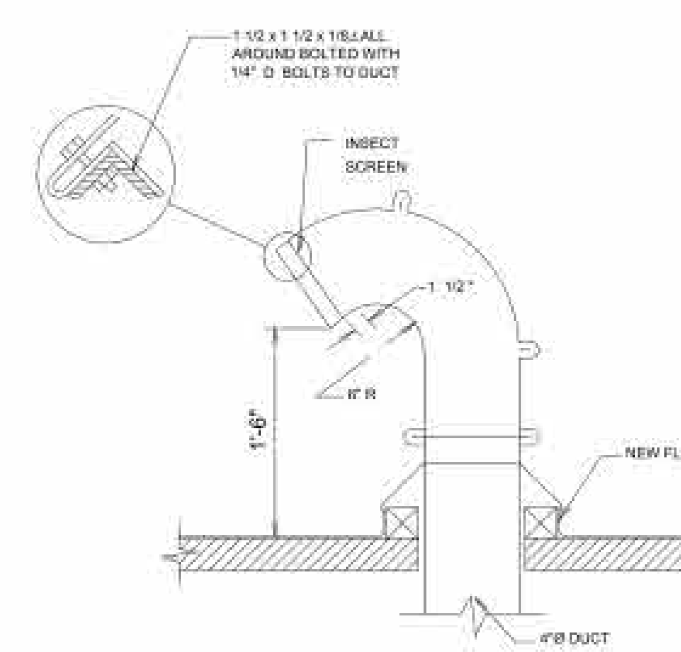

15 ROOF OUTSIDE AIR DETAIL
NTS

16 SCUPPER & OVERFLOW DETAIL
NTS

DRC
PZ24-12000008
09/18/2024

GANEM CONSULTING ENGINEERING
FL. C.A. #31187 - FL. PE #74745
15805 Biscayne Blvd. Suite 210
North Miami Beach, Fl. 33160
TEL: (786) 916-6546
fax: (305) 848-9318
alioskar@ganemconsultingeng.com

KEYPLAN

Alioskar Ganem Osorio
Digitally signed by Alioskar Ganem Osorio
Date: 2024.01.26 11:12:07 -05'00'

CONSULTING ENGINEER

ALIOSKAR GANEM P.E
FL. LIC. No. 74745

ECO POMPANO TOWNHOME DEVELOPMENT

3229 NE 5TH ST, POMPANO BEACH, FL. 33062

PROPERTY ID.
484331080284

UNIT 4

NOTES/COMMENTS

REVISIONS / SUBMISSIONS

DRAWN BY: AG
CHECKED BY: AG
INITIAL DRAWING RELASE DATE: ISSUE DATE

DETAILS

A-501.4

DRC
PZ24-12000008
5/15/2024